□□□□□□□□ □□:
1. 1/3 □□□ CCD □□□□
2. □□□□□□□□ IP66 □□□□□□□□□
3. □□□□□□□□□□□□□
4. □□□□□□□□□□□
5. 0 □□□□□□□□□ LED
6. □□□□□□□□□□□
7. 420TVL/480TVL/600TVL □□□□□□
8. CE FCC □□□□□□

□□□□□□□□ □□□□□:

□□	□□□□□
□□□□	1/3 "□□□□□□ CCD
□□□□□□□	PAL/NTSC
□□□□□□□□□□	PAL: 500Hx582V NTSC: 500Hx494V
□□□□□	420TVL/480TVL/600TVL
□□	0□□□□ f1.2 (□□□ LED)
□□□□□□□□□□□	625TVL□ 2:1 □□□□□□□
□□	□□
□□□□□□□□	850nm
S/N □	50 dB □□ (AGC □□)
□□□□□□ (AGC)	□□
□□□□□□□□	□□
□□□□□□□	□□
□□ □□□	□□
□□□ LED	12pcs
□□□ LED □□□	10m
□□□□□	1 Vp-p□75ωcomposite□BNC x1
□□□□□□□	□□□□□□
□□□	□□□□□□
□□□□	0.45
□□□	f 3.6 mm □□□□□
□□□□□□□□□□□□□□	N/A
□□□□□□□	m12xp 0.5 mm □□□□
□□□□	N/A
□□□□□	0-60 °
□□	12v DC ± 10%
□□□□	190mA
□□ (L x □ x □□)	48.5 L x 87W x 61.2 h mm
□□□□	242g
□□□/□□	N/A
□□□□	-10 ° c ~ + 50 ° c

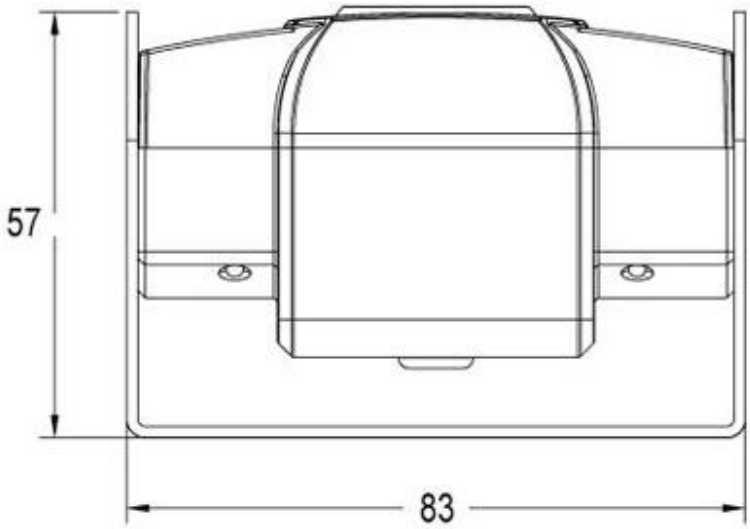
57
83

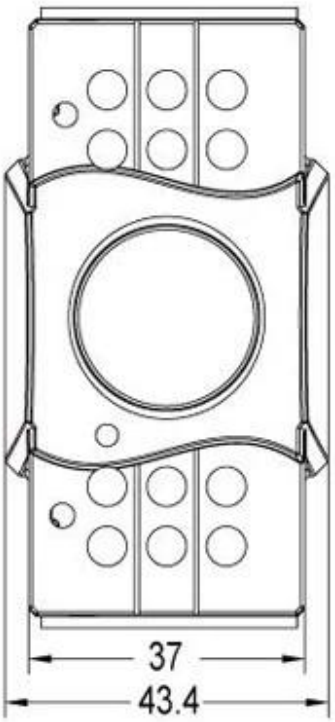
37
43.4

□□□□□□□□□□□:

VERIFICATION OF CONFORMITY
Verification of Conformity

VERIFICATION OF CONFORMITY
Verification of Conformity

CERTIFICATE OF CONFORMITY
CERTIFICATE
of Conformity
CE

CERTIFICATE OF CONFORMITY
CERTIFICATE
of Conformity
CE

CERTIFICATE OF CONFORMITY
CERTIFICATE
of Conformity
RoHS

CERTIFICATE OF CONFORMITY
CERTIFICATE
of Conformity
RoHS

□□□□□□□□□□□□□□□□ □□□□□□□□□

□□□□□□□□□□□□□□□:

□□□□□□□□□□□□:
1. □□□□□□□□□□□□□□/DHL/UPS/TNT□□□□□□□;
2. □□□□□: □□□□□□□□3-7 □;□□□□□□ negoniation
□□□□:
1. □□: t/t□□□□□□□□□□□□PayPal;30% □□□□;□□□□ 70% □□□□□□
2. MOQ: 1 □
3. □□: □
4. □□□□□□□: 1 □□□□□ pc□□□□□□□□□□□□netural □□□□□□□□□□□□□□□□□□ □□

□□□□□□□□?
1. □□□□□3□□□□□□□□□□□□□
2. □□□□□□□□□□□□□□□□□□□□□□□□□□□□□□□□□□□□□□
3. □ Veritas □□□□□□□□□□□
□□□□ 4.100% QC □□□
5. CE/RoHS/FCC □□□□□□□□□□□□